UNIVERSITY OF CAMBRIDGE INTERNATIONAL EXAMINATIONS
International General Certificate of Secondary Education

CANDIDATE NAME	

CENTRE NUMBER						CANDIDATE NUMBER				

* 7 6 7 7 2 9 7 0 *

CHEMISTRY **0620/32**

Paper 3 (Extended) **May/June 2010**

1 hour 15 minutes

Candidates answer on the Question Paper.

No Additional Materials are required.

READ THESE INSTRUCTIONS FIRST

Write your Centre number, candidate number and name on all the work you hand in.
Write in dark blue or black pen.
You may use a pencil for any diagrams, graphs or rough working.
Do not use staples, paper clips, highlighters, glue or correction fluid.
DO **NOT** WRITE IN ANY BARCODES.

Answer **all** questions.
A copy of the Periodic Table is printed on page 16.

At the end of the examination, fasten all your work securely together.
The number of marks is given in brackets [ ] at the end of each question or part question.

For Examiner's Use	
1	
2	
3	
4	
5	
6	
7	
8	
Total	

This document consists of **13** printed pages and **3** blank pages.

© UCLES 2010

UNIVERSITY of CAMBRIDGE International Examinations

For Examiner's Use

1 For each of the following unfamiliar elements predict one physical and one chemical property.

(a) caesium (Cs)

physical property .....

chemical property .....

..... [2]

(b) vanadium (V)

physical property .....

chemical property .....

..... [2]

(c) fluorine (F)

physical property .....

chemical property .....

..... [2]

[Total: 6]

2 The hydrolysis of complex carbohydrates to simple sugars is catalysed by enzymes called carbohydrases and also by dilute acids.

(a) **(i)** They are both catalysts. How do enzymes differ from catalysts such as dilute acids?

..... [1]

(ii) Explain why ethanol, C_2H_6O, is not a carbohydrate but glucose, $C_6H_{12}O_6$, is a carbohydrate.

.....

..... [2]

(b) Draw the structure of a complex carbohydrate, such as starch. The formula of a simple sugar can be represented by HO—□—OH.

[3]

© UCLES 2010

For Examiner's Use

(c) Iodine reacts with starch to form a deep blue colour.

(i) In the experiment illustrated below, samples are removed at intervals and tested with iodine in potassium iodide solution.

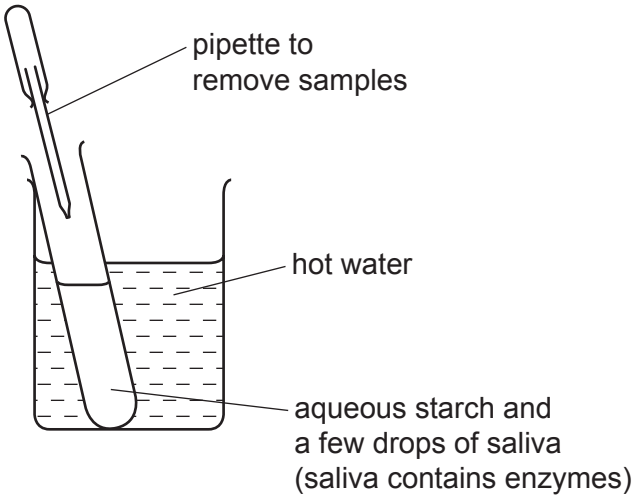

Typical results of this experiment are shown in the table.

time / min	colour of sample tested with iodine in potassium iodide solution
0	deep blue
10	pale blue
30	colourless

Explain these results.

.....

.....

..... [3]

(ii) If the experiment was repeated at a higher temperature, 60 °C, all the samples stayed blue. Suggest an explanation.

..... [1]

[Total: 10]

For Examiner's Use

3 The following are examples of redox reactions.

(a) Bromine water was added to aqueous sodium sulfide.

$$Br_2(aq) + S^{2-}(aq) \rightarrow 2Br^-(aq) + S(s)$$

(i) Describe what you would observe when this reaction occurs.

.....

..... [2]

(ii) Write a symbol equation for this reaction.

..... [1]

(iii) Explain, in terms of electron transfer, why bromine is the oxidant (oxidising agent) in this reaction.

.....

..... [2]

(b) Iron and steel in the presence of water and oxygen form rust.

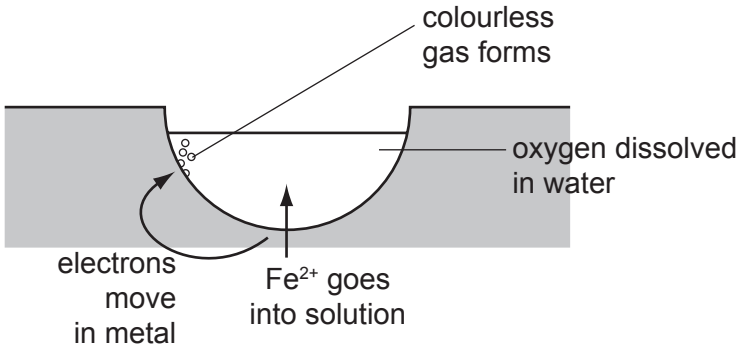

The reactions involved are:

reaction 1

$Fe \rightarrow Fe^{2+} + 2e^-$

The electrons move through the iron on to the surface where a colourless gas forms.

reaction 2

$Fe^{2+} + 2OH^- \rightarrow Fe(OH)_2$
from water

reaction 3

.....$Fe(OH)_2$ + O_2 + ...H_2O $\rightarrow$ .....$Fe(OH)_3$

The water evaporates to leave rust.

For Examiner's Use

(i) What type of reaction is **reaction 1**? ..... [1]

(ii) Deduce the name of the colourless gas mentioned in **reaction 1**.

..... [1]

(iii) What is the name of the iron compound formed in **reaction 2**?

..... [1]

(iv) Balance the equation for **reaction 3**.

.....$Fe(OH)_2$ + O_2 + ...H_2O $\rightarrow$ .....$Fe(OH)_3$

[1]

(v) Explain why the change $Fe(OH)_2$ to $Fe(OH)_3$ is oxidation.

.....

..... [1]

(vi) Explain why iron in electrical contact with a piece of zinc does not rust.

.....

.....

..... [3]

[Total: 13]

4 But-1-ene is a typical alkene. It has the structural formula shown below.

$$CH_3 — CH_2 — CH = CH_2$$

The structural formula of cyclobutane is given below.

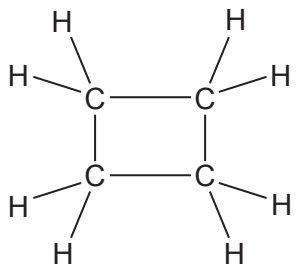

(a) These two hydrocarbons are isomers.

(i) Define the term *isomer*.

.....

..... [2]

For Examiner's Use

(ii) Draw the structural formula of another isomer of but-1-ene.

[1]

(iii) Describe a test which would distinguish between but-1-ene and cyclobutane.

reagent .....

result with but-1-ene .....

.....

result with cyclobutane .....

..... [3]

(b) Describe how alkenes, such as but-1-ene, can be made from alkanes.

.....

..... [2]

(c) Name the product formed when but-1-ene reacts with:

bromine, ... [1]

hydrogen, ... [1]

steam. ..... [1]

[Total: 11]

© UCLES 2010

For Examiner's Use

5 Fuel cells are used in spacecraft to produce electrical energy.

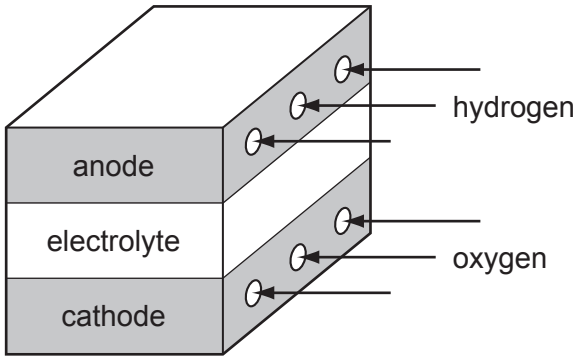

(a) How is oxygen obtained from liquid air?

.....

..... [2]

(b) Hydrogen and oxygen react to form water.

$$2H_2 + O_2 \rightarrow 2H_2O$$

(i) Give an example of bond breaking in the above reaction.

..... [1]

(ii) Give an example of bond forming in the above reaction.

..... [1]

(iii) Is the change given in **(i)** exothermic or endothermic?

..... [1]

(c) (i) Give **two** reasons why hydrogen may be considered to be the ideal fuel for the future.

.....

.....

..... [2]

(ii) Suggest a reason why hydrogen is not widely used at the moment.

.....

..... [1]

[Total: 8]

For Examiner's Use

6 Thallium is a metal in Group III. It has oxidation states of +1 and +3.

(a) Give the formula for the following thallium compounds.

(i) thallium(I) sulfide ..... [1]

(ii) thallium(III) chloride ..... [1]

(b) Thallium(I) chloride is insoluble in water. Complete the description of the preparation of a pure sample of this salt.

Step 1

Mix a solution of sodium chloride with thallium(I) sulfate solution. A white precipitate forms.

Step 2

..... [1]

Step 3

..... [1]

Step 4

..... [1]

(c) When thallium(I) chloride is exposed to light, a photochemical reaction occurs. It changes from a white solid to a violet solid.

(i) Name another metal halide which changes colour when exposed to light. Give the major use of this metal halide.

name .....

use ..... [2]

For Examiner's Use

(ii) A piece of paper coated with thallium(I) chloride is exposed to a bright light.

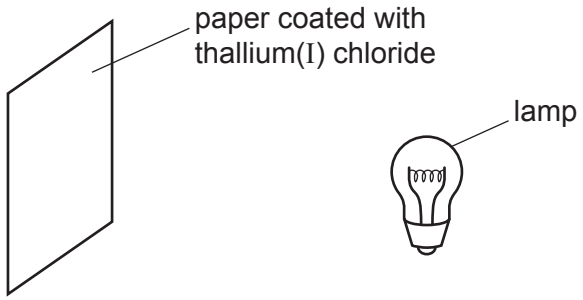

Suggest **two** ways of increasing the time it takes for the violet colour to appear.

.....

.....

..... [2]

(d) Thallium(I) hydroxide is an alkali. It has similar properties to sodium hydroxide.

(i) Complete the following word equation.

thallium(I) hydroxide + ammonium sulfate → ..... + ... + ...
.....

[1]

(ii) Complete the equation.

..... $TlOH$ + H_2SO_4 → ..... + ...

[2]

(iii) Aqueous thallium(I) hydroxide was added to aqueous iron(II) sulfate. Describe what you would see and complete the ionic equation for the reaction.

observation .....

..... [1]

equation Fe^{2+} + ... OH^- → ..... [1]

[Total: 14]

For Examiner's Use

7 Aluminium was first isolated in 1827 using sodium.

$$AlCl_3 + 3Na \rightarrow Al + 3NaCl$$

Aluminium, obtained by this method, was more expensive than gold.

(a) Suggest an explanation why aluminium was so expensive.

.....

..... [1]

(b) The modern method for extracting aluminium is the electrolysis of a molten electrolyte, aluminium oxide dissolved in cryolite. The aluminium oxide decomposes.

$$2Al_2O_3 \rightarrow 4Al + 3O_2$$

Both electrodes are made of carbon.

(i) Give **two** reasons why the oxide is dissolved in cryolite.

.....

.....

..... [2]

(ii) Complete the ionic equation for the reaction at the anode.

..... $O^{2-} \rightarrow O_2$ + ... e^-

[2]

(iii) Why do the carbon anodes need to be replaced frequently?

.....

..... [1]

(c) The electrolysis of a molten electrolyte is one method of extracting a metal from its ore. Other methods are the electrolysis of an aqueous solution and the reduction of the oxide by carbon. Explain why these last two methods cannot be used to extract aluminium.

electrolysis of an aqueous solution .....

.....

using carbon .....

..... [2]

[Total: 8]

© UCLES 2010

For Examiner's Use

8 Nitrogen dioxide is a brown gas. It can be made by heating certain metal nitrates.

$$2Pb(NO_3)_2 \rightarrow 2PbO + 4NO_2 + O_2$$

(a) (i) Name another metal whose nitrate decomposes to give the metal oxide, nitrogen dioxide and oxygen.

..... [1]

(ii) Complete the word equation for a metal whose nitrate does not give nitrogen dioxide on decomposition.

metal nitrate → ..... + oxygen

[1]

(b) At most temperatures, samples of nitrogen dioxide are equilibrium mixtures.

$$\underset{\text{dark brown}}{2NO_2(g)} \rightleftharpoons \underset{\text{pale yellow}}{N_2O_4(g)}$$

(i) At 25 °C, the mixture contains 20 % of nitrogen dioxide. At 100 °C this has risen to 90 %. Is the forward reaction exothermic or endothermic?
Give a reason for your choice.

.....

.....

..... [2]

(ii) Explain why the colour of the equilibrium mixture becomes lighter when the pressure on the mixture is increased.

.....

.....

..... [2]

For Examiner's Use

(c) A 5.00 g sample of impure lead(II) nitrate was heated. The volume of oxygen formed was 0.16 dm^3 measured at r.t.p. The impurities did not decompose.
Calculate the percentage of lead(II) nitrate in the sample.

$$2Pb(NO_3)_2 \rightarrow 2PbO + 4NO_2 + O_2$$

Number of moles of O_2 formed = ...

Number of moles of $Pb(NO_3)_2$ in the sample = ...

Mass of one mole of $Pb(NO_3)_2$ = 331 g

Mass of lead(II) nitrate in the sample = ... g

Percentage of lead(II) nitrate in sample = ... [4]

[Total: 10]

BLANK PAGE

© UCLES 2010

BLANK PAGE

© UCLES 2010

BLANK PAGE

© UCLES 2010

DATA SHEET
The Periodic Table of the Elements

Group I	Group II											Group III	Group IV	Group V	Group VI	Group VII	Group 0
							1 **H** Hydrogen 1										4 **He** Helium 2
7 **Li** Lithium 3	9 **Be** Beryllium 4											11 **B** Boron 5	12 **C** Carbon 6	14 **N** Nitrogen 7	16 **O** Oxygen 8	19 **F** Fluorine 9	20 **Ne** Neon 10
23 **Na** Sodium 11	24 **Mg** Magnesium 12											27 **Al** Aluminium 13	28 **Si** Silicon 14	31 **P** Phosphorus 15	32 **S** Sulfur 16	35.5 **Cl** Chlorine 17	40 **Ar** Argon 18
39 **K** Potassium 19	40 **Ca** Calcium 20	45 **Sc** Scandium 21	48 **Ti** Titanium 22	51 **V** Vanadium 23	52 **Cr** Chromium 24	55 **Mn** Manganese 25	56 **Fe** Iron 26	59 **Co** Cobalt 27	59 **Ni** Nickel 28	64 **Cu** Copper 29	65 **Zn** Zinc 30	70 **Ga** Gallium 31	73 **Ge** Germanium 32	75 **As** Arsenic 33	79 **Se** Selenium 34	80 **Br** Bromine 35	84 **Kr** Krypton 36
85 **Rb** Rubidium 37	88 **Sr** Strontium 38	89 **Y** Yttrium 39	91 **Zr** Zirconium 40	93 **Nb** Niobium 41	96 **Mo** Molybdenum 42	**Tc** Technetium 43	101 **Ru** Ruthenium 44	103 **Rh** Rhodium 45	106 **Pd** Palladium 46	108 **Ag** Silver 47	112 **Cd** Cadmium 48	115 **In** Indium 49	119 **Sn** Tin 50	122 **Sb** Antimony 51	128 **Te** Tellurium 52	127 **I** Iodine 53	131 **Xe** Xenon 54
133 **Cs** Caesium 55	137 **Ba** Barium 56	139 **La** Lanthanum 57 *	178 **Hf** Hafnium 72	181 **Ta** Tantalum 73	184 **W** Tungsten 74	186 **Re** Rhenium 75	190 **Os** Osmium 76	192 **Ir** Iridium 77	195 **Pt** Platinum 78	197 **Au** Gold 79	201 **Hg** Mercury 80	204 **Tl** Thallium 81	207 **Pb** Lead 82	209 **Bi** Bismuth 83	**Po** Polonium 84	**At** Astatine 85	**Rn** Radon 86
Fr Francium 87	226 **Ra** Radium 88	227 **Ac** Actinium 89 †															

140 **Ce** Cerium 58	141 **Pr** Praseodymium 59	144 **Nd** Neodymium 60	**Pm** Promethium 61	150 **Sm** Samarium 62	152 **Eu** Europium 63	157 **Gd** Gadolinium 64	159 **Tb** Terbium 65	162 **Dy** Dysprosium 66	165 **Ho** Holmium 67	167 **Er** Erbium 68	169 **Tm** Thulium 69	173 **Yb** Ytterbium 70	175 **Lu** Lutetium 71
232 **Th** Thorium 90	**Pa** Protactinium 91	238 **U** Uranium 92	**Np** Neptunium 93	**Pu** Plutonium 94	**Am** Americium 95	**Cm** Curium 96	**Bk** Berkelium 97	**Cf** Californium 98	**Es** Einsteinium 99	**Fm** Fermium 100	**Md** Mendelevium 101	**No** Nobelium 102	**Lr** Lawrencium 103

*58-71 Lanthanoid series
†90-103 Actinoid series

Key

a	
X	a = relative atomic mass
b	**X** = atomic symbol
	b = proton (atomic) number

The volume of one mole of any gas is 24 dm^3 at room temperature and pressure (r.t.p.).

Permission to reproduce items where third-party owned material protected by copyright is included has been sought and cleared where possible. Every reasonable effort has been made by the publisher (UCLES) to trace copyright holders, but if any items requiring clearance have unwittingly been included the publisher will be pleased to make amends at the earliest possible opportunity.

University of Cambridge International Examinations is part of the Cambridge Assessment Group. Cambridge Assessment is the brand name of University of Cambridge Local Examinations Syndicate (UCLES), which is itself a department of the University of Cambridge.

© UCLES 2010